# TMR-FMD8133ULNx

## Single-axis, Low-noise, High-Transient-Response Magnetic Sensor

## Description

The TMR-FMD8133ULNx single-axis, low-noise, high-transient-response magnetic sensor uses a miniaturized, ultra-low-noise TMR sensor chip—independently developed and manufactured by Multi-Dimension Technology—as its sensing element. Based on the relevant tests, the 1/f noise is suppressed through electromagnetic modulation technology, and the dynamic signal amplification is carried out to improve the detection effect of very low-frequency weak magnetic signals, effectively suppressing high-frequency noise and improving the signal-to-noise ratio of weak magnetic signals, thereby achieving high transient response and high-resolution detection of weak magnetic signals. After the client device is sampled, perform digital amplification by 10 to 20 times, and this will enable the sensor to achieve the best detection effect for low-frequency weak magnetic signals.

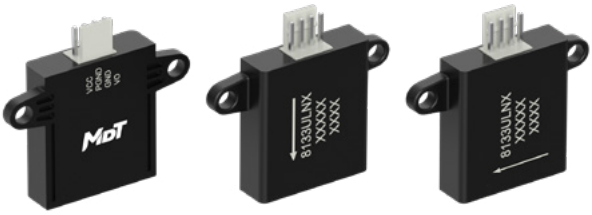

TMR-FMD8133ULNx

## Features and Benefits

- Strong low-frequency dynamic weak magnetic field detection capability
- High-resolution measurements
- Maximum saturation field: ~ ±600 μT
- Broad background magnetic field: ~ ±300 μT
- Highly integrated design, easy secondary integration

## Applications

- Security system
- Magnetic material detection
- Traffic flow control
- Magnetic communication
- Biomedical

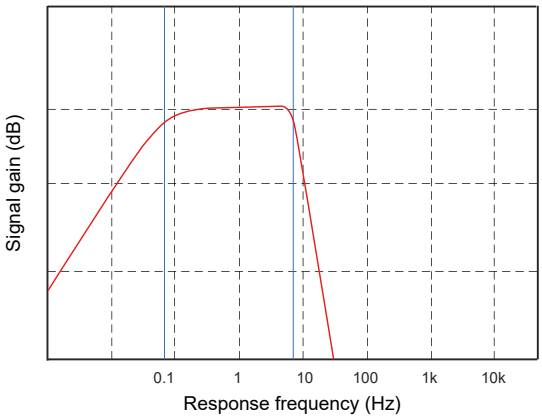


Default frequency response curve

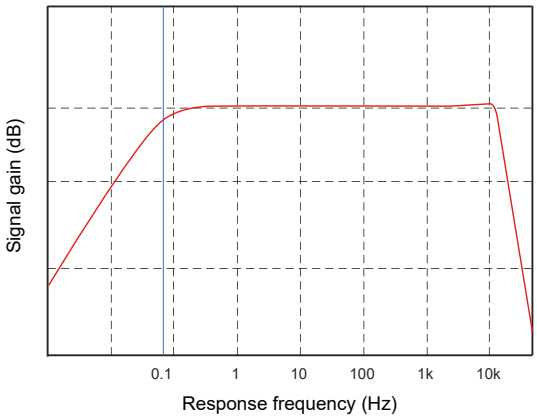


Maximum frequency response chart

## Selection Guide

| Part Number | Sensing Direction | Frequency Response (-3dB) | Magnetic Field Spectral Noise Density | Supply Voltage | Dimension (mm) |
|---|---|---|---|---|---|
| TMR-FMD8133ULNH (R) | Inside | 0.1 to 10 kHz | 1000 pT/√Hz@1Hz | 3.3 V | 48.5 × 52 × 9.5 |
| TMR-FMD8133ULNX (R) | Inside | 0.1 to 10 kHz | 100 pT/√Hz@1Hz | 3.3 V | 48.5 × 52 × 9.5 |
| TMR-FMD8133ULNV (R) | Inside | 0.1 to 10 kHz | 50 pT/√Hz@1Hz | 3.3 V | 48.5 × 52 × 9.5 |

Note: The Default response frequency is 7Hz.

## Product Part Number Description

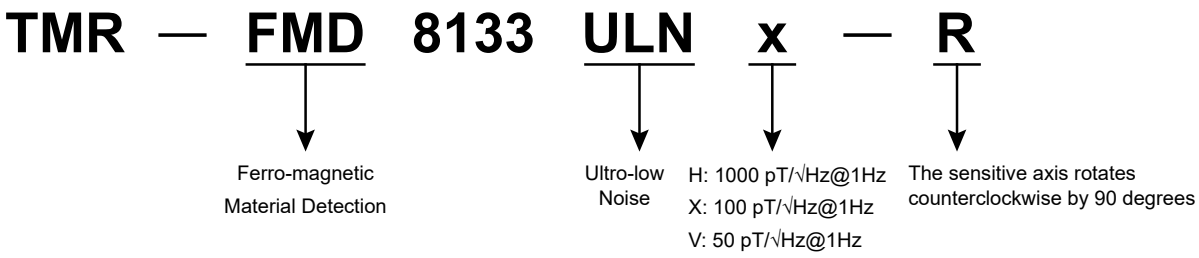


## Catalogue

1. Specification Parameters.....03
2. Electrical Characteristics Parameters.....03
3. Interface Definition.....04
4. Mechanical / Interface Specifications.....04
5. Storage and Operating Environment Parameters.....04
6. Recommend Interface Circuits.....05
7. Dimensions.....06

## 1. Specification Parameters

| Specification | Typical Value | Unit | Applicable Model |
|---|---|---|---|
| Number of axes | 1 | - | All models |
| Saturation field[1)] | ±1000 | μT | TMR-FMD8133ULNH (R) |
| | ±600 | | TMR-FMD8133ULNX (R) |
| | ±200 | | TMR-FMD8133ULNV (R) |
| Measuring range[1)] | ±500 | μT | TMR-FMD8133ULNH (R) |
| | ±300 | | TMR-FMD8133ULNX (R) |
| | ±100 | | TMR-FMD8133ULNV (R) |
| Magnetic field spectral noise density | 1000 | pT/√Hz@1Hz | TMR-FMD8133ULNH (R) |
| | 100 | | TMR-FMD8133ULNX (R) |
| | 50 | | TMR-FMD8133ULNV (R) |
| Sensitivity | 1 | mV/nT@1Hz | TMR-FMD8133ULNH (R) |
| | 2 | | TMR-FMD8133ULNX (R) |
| | 3 | | TMR-FMD8133ULNV (R) |
| Frequency response (-3dB)[2)] | 0.1 ~ 10000 | Hz | All models |
| Start up time | 100 | ms | All models |
| Electrical balance time | 1 | min | All models |

1) TMR chip specification

2) Customizable, up to 10 kHz (default: 7 Hz)

## 2. Electrical Characteristics Parameters

| Specification | Condition | Min. | Typ. | Max. | Unit |
|---|---|---|---|---|---|
| Supply voltage | - | 3.0 | 3.3 | 5.0 | V |
| Supply current | 3.3 V Supply | - | 33 | - | mA |
| | 5 V Supply | - | 23 | - | mA |
| Starting current | - | - | - | 60 | mA |
| Analog voltage output | 3.3 V Supply | 0 | - | 3.3 | V |
| | 5 V Supply | 0 | - | 5 | V |
| Quiescent output | - | - | 1.6 | - | V |
| Input protection | - | Reverse-polarity protection | | | - |

## 3. Interface Definition

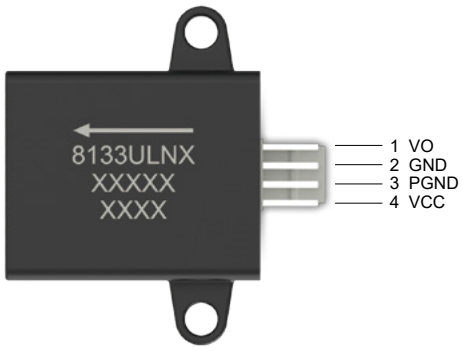


| Number | Name | Function |
|---|---|---|
| 1 | VO | Signal |
| 2 | GND | Singal ground |
| 3 | PGND | Power ground |
| 4 | $V_{CC}$ | Power supply |

## 4. Mechanical / Interface Specifications

| Specification | Parameter | Unit |
|---|---|---|
| Dimensions (length × width × height) | 48.5 × 52 × 9.5 | mm |
| Weight | < 20 | g |
| Electrical interface | 4PIN, 2.5 mm pitch | mm |
| Mounting interface | 2 × Φ5, hole-center distance 44 | mm |
| Sensitive axis direction | Isotropic (> 3 times the maximum size of the target to be measured) | - |

## 5. Storage and Operating Environment Parameters

| Subject | Parameter | Unit |
|---|---|---|
| Operating temperature range | -20 to +70 | °C |
| Storage temperature range | -40 to +85 | °C |
| Environmental protection | Potted / encapsulated | - |

## 6. Recommend Interface Circuits

The module output impedance is related to the magnetic field intensity to be detected and the back-end circuit, and power-frequency interference may also be present. The following interface circuits are therefore recommended:

1) An isolation circuit before AD sampling, as shown in Figure 1.
2) For the secondary amplification of the module output signal, the circuit shown in Figure 2 can be adopted; (Digital magnification is preferred, about 20 times).
3) If the signal contains obvious power-frequency interference, use the notch filter circuit shown in Figure 3.

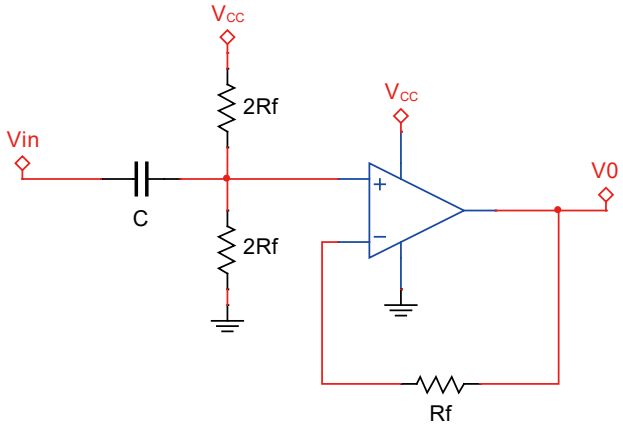


Figure 1. Isolation Circuit

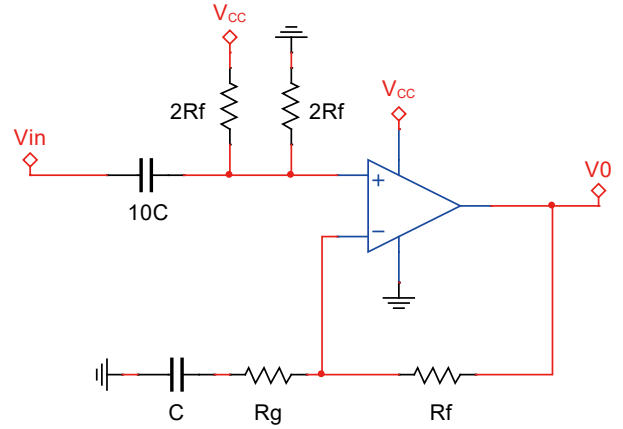


Figure 2. Isolation Amplifier Circuit

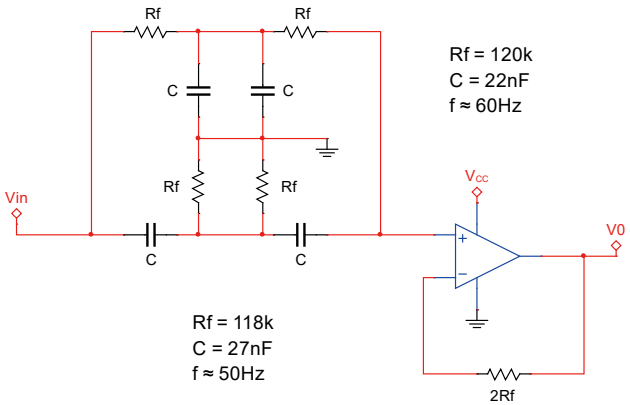


Figure 3. Notch Filter Circuit

## 7. Dimensions

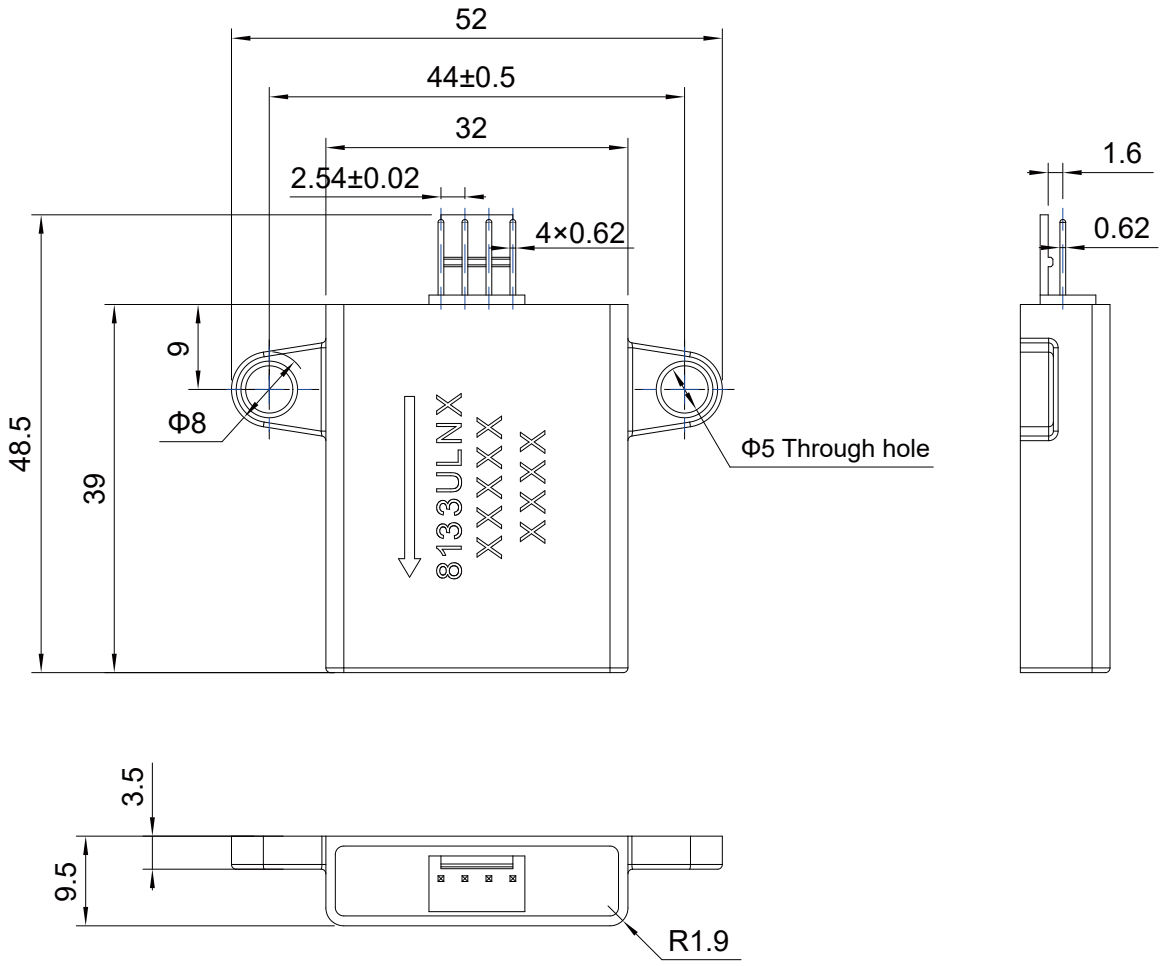


Figure 4. TMR-FMD8133ULN Outline Dimensions (Unit: mm)

## Package Marking Description

Line 1: Arrow, indicating the sensitive-axis direction.

Line 2: Product number.

Line 3: Production date. The first two digits indicate the year, the middle part is the month, and the last two digits indicate the day. For example, “25N06” indicates production on November 6, 2025.

Line 4: Bandwidth. “3V10” is 7 Hz, “3V2H” is 200 Hz, and “3V10k” is 10 kHz.

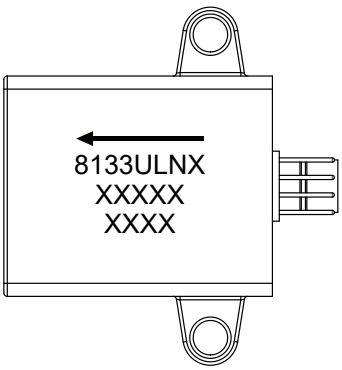


| 1 月 | 2 月 | 3 月 | 4 月 | 5 月 | 6 月 | 7 月 | 8 月 | 9 月 | 10 月 | 11 月 | 12 月 |
|---|---|---|---|---|---|---|---|---|---|---|---|
| T | F | M | A | W | J | L | B | S | O | N | D |

## Copyright © 2026 by MultiDimension Technology Co., Ltd.

Information furnished herein by MultiDimension Technology Co., Ltd. (hereinafter MDT) is believed to be accurate and reliable. However, MDT disclaims any and all warranties and liabilities of any kind, with respect to any examples, hints or any performance or use of technical data as described herein and/or any information regarding the application of the product, including without limitation warranties of non-infringement of intellectual property rights of any third party. This document neither conveys nor implies any license under patent or other industrial or intellectual property rights. Customer or any third-party must further determine the suitability of the MDT products for its applications to avoid the applications default of customer or third-party. MDT accept no liability in this respect.

MDT does not assume any liabilities of any indirect, incidental, punitive, special or consequential damages (including without limitation of lost profits, lost savings, business interruption, costs related to the removal or replacement of any products or rework charges) whether or not such damages are based on tort (including negligence), warranty, breach of contract or any other legal theory. Notwithstanding any damages that customer might incur for any reason whatsoever, MDT's aggregate and cumulative liability towards customer for the products described herein shall be limited in accordance with the terms and conditions of commercial sale of MDT.

Absolute maximum ratings are the extreme limits the device will withstand without damage to the MDT product. However, the electrical and mechanical characteristics are not guaranteed as the maximum limits (above recommended operating conditions) are approached. MDT disclaims any and all warranties and liabilities of the MDT product will operate at absolute maximum ratings.

Specifications may change without notice.

Please download latest document from our official website www.dowaytech.com/en.

## Recycling

The product(s) in this document need to be handed over to a qualified solid waste management services company for recycling in accordance with relevant regulations on waste classification after the end of the product(s) life.

MULTIDIMENSION
MultiDimension Technology Co., Ltd.
No.2 Guangdong Road, Zhangjiagang Free Trade Zone, Jiangsu, China
Web：www.dowaytech.com/en E-mail：info@dowaytech.com